Driver Manual
2026

	Författare: Fredrik Edvardsson	
Dokumentnamn: Åkerihandbok	Godkänd av: Ewa Süld-Forsell	
	Datum: 2026-01-02	Version: 08

Introduction

Scandi Bulk AB has been active since the year of 2006 and is a logistics company based in the city center of Gothenburg. We offer the industry high quality, efficient logistics solutions with minimized environmental impact such as transport, intermediate storage and handling of bulk goods, both liquid and solids.

We are certified according to ISO 9001: 2015 och 14001: 2015 and also reviewed for our transports by **SQAS** (*Safety & Quality Assessment System*).

This driver manual is an essential part of our management system and constitutes the base for the certification that is prerequisite for carrying out bulk transports today, all according to **SQAS**.

We expect high quality of the services provided by our suppliers, hauliers and drivers. It is also our duty to share all information we have at our disposal with all our partners to achive this.

It is important that you, as a driver, take note of the information contained in this haulage manual, especially the section regarding safety.

The safety instructions contained in this driver manual must always be followed.

The driver manual must be available in the truck for easy use. Hauliers and drivers who are driving for Scandi Bulk AB undertake to operate in accordance with relevant national and international regulations and laws.

If there are any questions regarding the contents of this driver manual, please contact:

Ewa Süld-Forsell, CEO
+46 31-708 66 33
ewa@scandibulk.se

Table of contents

1. Our company

1.1 Organisation 4
1.2 Our policies 5
1.3 Our customers 10
1.4 Education according to SQAS 10

2. Regulatory framework

2.1 Driver instructions 11
2.2 Personal protective equipment 12
2.3 Driving licence/Driving and Rest Times and Working Hours 13
2.4 Operation Clean Sweep 14

3. BBS/YKB

3.1 BBS/YKB 14

4. Loading - Unloading

4.1 General procedures for loading and unloading units 15
4.2 Procedures for loading units 17
4.3 Procedures for unloading units 18
4.4 Loading of tank containers 19
4.5 Unloading of tank containers 19
4.6 Sampling, tank 20
4.7 Preventive procedures – pressure tanks 21
4.8 Tipping bulk unloading 22
4.9 Unloading of tipping bulk with cell feeder 24
4.10 Transport of dangerous goods 25
4.11 Information about products 29
4.12 Control – Inspection, carrier 30

5. Emergency measures

5.1 Drivers responsibilities and actions 32
5.2 Contact in the event of an accident – incident – emergency 34

Enclosure A Equipment condition report 35

1.1 Organization

Scandi Bulk AB is characterized by a flat organization with short and quick decision paths. See organization chart below:

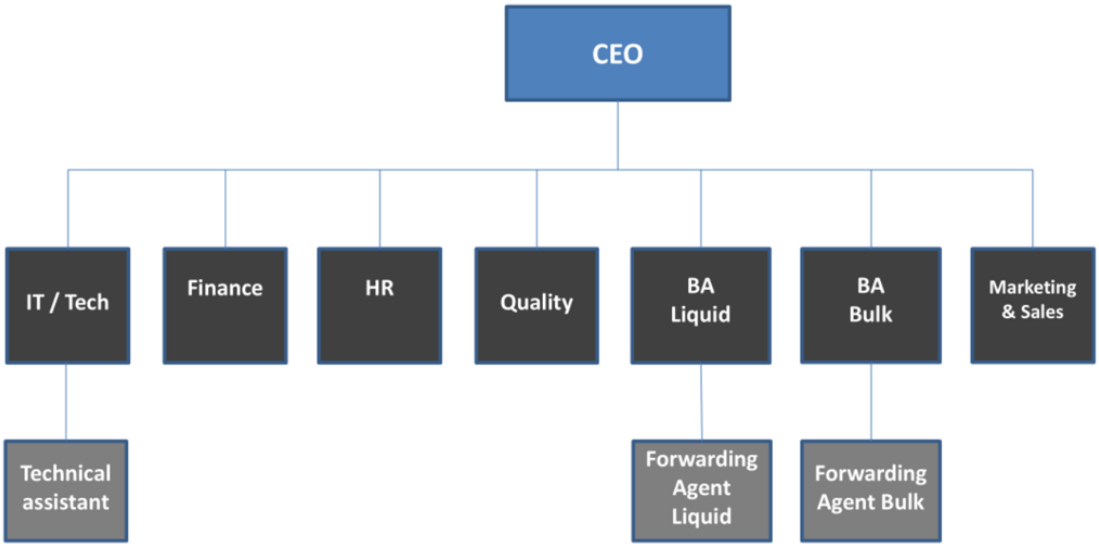

CEO: Ewa Süld-Forsell	ewa@scandibulk.se
Business Developer: Johan Ljungmark	johan@scandibulk.se
Operations Manager: Nickas Vineberg	niclas@scandibulk.se
HR: Johanna Lorensson	johanna@scandibulk.se
Finance: Emma Bylund	emma@scandibulk.se
IT / Tech: Fredrik Edvardsson	fredrik@scandibulk.se
BA Liquids: Therese Stocks	therese@scandibulk.se
BA Bulk: Khalid El Ouardi	khalid@scandibulk.se
Claim: Philip Najim	fhilip@scandibulk.se
Safety advisor:	
Fredrik Edvardsson	fredrik@scandibulk.se
+46 31-708 31 72	

1.2 Our policies

Business Policy

Scandi Bulk ABs main keyword is always to be a reliable partner. We shall always meet the relevant requirements placed upon us. This means that we shall be aware of the requirements and also be sensitive to expectations. To achive this, our cooperation with customers, suppliers and other partners is characterized by knowledge, loyalty, accuracy and security.

Our customers are always at the center in terms of trust, availability, treatment and service behaviour. This means that our employees are our main asset.

Our business has a major impact on the environment and therefore environmental issues are important to us. We strive to constantly improve our commitments, and always improve the utilization of our resources.

Our sustainable way of working starts already in the choice of transport arrangement. Through our striving for minimal environmental impact, we create a transport chain where every step is taken into account and selected according to the best alternatives.

We must, in cooperation with all actors in the transport chain, prevent incidents and accidents that to some extent affect our environment in a negative way. This means, for example, conveying advice, knowledge and interacting with suppliers and distributors to jointly create well thought out, secure and sustainable logistics solutions.

We achive this by having long-term relations with our hauliers and a good communication regarding the environment, quality and security.

Scandi Bulk AB – Code of Conduct

This code of conduct has been adopted to emphasize the values and principles that govern our relationship with employees, customers, business partners and other interests. Scandi Bulk encourages its suppliers, co-workers and other business partners to apply these principles.

Our principles

Scandi Bulk AB shall always act as a reliable partner that lives up to its commitments. Our employees shall always feel confident that we as an employer always follow the laws and requirements that the outside world imposes on us. We work proactively to prevent all forms of discrimination or harassment. It is also a matter of course for us to offer all employees a healthy and safe working environment.

We are only engaged in business activities that are consistent with national laws, international conventions and agreements entered into. We respect and comply with environmental legislation, agreements and safety requirements and other provisions that sets the framework for our business.

Countering corruption and money laundering

No form of corruption or bribery within the company is tolerated. It also includes offers of payment to or from employees, external individuals or organizations.

It is always a risk that Scandi Bulk AB, like all other companies and activities, will be targeted by criminals who tries to launder black money or finance criminal activities. Therefore, it is important that we pay attention to suspicious activities and that we ourselves conduct the business in an ethical and social responsible way. We do this by conducting audits of new customers, suppliers, subcontractors and partners. We have procedures in place to keep documentation on various decisions relating to financial transactions and are always vigilant for the slightest sign of uncertainty about financial processes. Scandi Bulk AB never handles with cash, regardless of whether a customer, supplier, partner, or other contact specifically requests cash payment.

Human rights and working conditions

It goes without saying that we respect international conventions on human rights. The company recruits and provides employees with equal opportunities and treatment regardless of gender, marital status, ethnic or national affiliation, sexual orientation, transgender identity, race religion, political opinion, age or disability. We strive for diversity and our employees should be given the best conditions necessary to maintain a high level of competence in their work. We encourage every employee to further develop and encourage initiatives for skill development in the field of work, for example through in-depth training.

The company supports the UN Global Compact (see last page) which includes ten principles on human rights, labour law issues, protection of the environment and the fight against corruption.

Environment and social responsibility

Scandi Bulk AB strives to carefully choose technology and distribution systems that provide minimal environmental impact. The company shall be in full control over the location of the carrier in order to reduce empty journeys.

The company applies sorting at source and strives to conserve paper consumption and other resources within the organization. We shall also ensure that waste management and disposal take in a safe and environmentally friendly manner. This is done by contract and on presentation of a permit.

Information and communication

Our information and communication is based on transparency, clarity, relevance and accessibility. Each manager is responsible for ensuring that his/her own employees are well informed about the companies operations and about our vision, our goals, strategies and values. At the same time, all employees have their own responsibility to comply with the content of the Code of Conduct.

Accurate accounting and financial reporting

All financial transactions shall be booked in accordance with applicable accounting principles and comply with applicable laws, rules and standards. The accounts shall show all types of transactions in a correct and non-leading manner and financial reporting shall be complete and reliable.

Managers and employees responsibilities

All managers at Scandi Bulk AB are responsible for informing and presenting the content and spirit of this document, as well as encouraging their employees to report behavior that is not consistent with its principles. Explicit or implicit acceptance of questionable acts will not be tolerated.

As a new employee or a new subcontractor, you are assigned this Code of Conduct to sign the receival, understanding and enforcement of it.

If you see or hear something that does not feel compatible with our way of working or that is not supported by our code of conduct, you should always, if you are an employee, contact your nearest manager. If you are contracted as a subcontractor, you should always first notify your contact person at the company. If you suspect major risks, irregularities, or other misconducts within Scandi Bulk AB, we encourage you to use our whistleblower function which can be accessed via our website, www.scandibulk.se

You can choose whether you want to report openly or anonymously. All reports and communications are treated in strict confidence and the investigation is handled with the utmost discretion and care regarding personal integrity.

Global Compacts 10 principles

Human rights

Principle 1 Businesses should support and respect the protection of internationally proclaimed human rights; and

Principle 2 make sure that they are not complicit in human rights abuses.

Labour

Principle 3 Businesses should uphold the freedom of association and the effective recognition of the right to collective bargaining;

Principle 4 the elimination of all forms of forced and compulsory labour;

Principle 5 the effective abolition of child labour; and

Principle 6 the elimination of discrimination in respect of employment and occupation.

Environment

Principle 7 Businesses should support a precautionary approach to environmental challenges;

Principle 8 undertake initiatives to promote greater environmental responsibility; and

Principle 9 encourage the development and diffusion of environmentally friendly technologies.

Anti-Corruption

Principle 10 Businesses should work against corruption in all its forms, including extortion and bribery.

1.3 Our customers

Our customers are mainly companies in the industry. These companies are highly profiled with their security systems. In order for Scandi Bulk AB to be a full supplier to these companies, it is necessary for us and our suppliers to meet their needs.

The customer has the right to expect adequate service in the form of:

- That the customer is and feels prioritized
- That you give a nice friendly service
- That a little more should be done than is expected
- Demonstrating cleanliness, punctuality and reliability
- That it facilitates a positive attitude

Any complaints that may arise regarding ongoing or previously completed transport shall be immediately reported to the management of Scandi Bulk AB. This can be reported by email to claims@scandibulk.se. Please report the occurred situation and register your name, company and contact information so we can get in contact with you.

1.4 Training

When transporting dangerous goods, the haulier is responsible for ensuring that the driver has relevant and approved training for the purpose.

The training which has been given to the driver, and which is organised by an approved trainer, shall include:

- Loading and unloading procedures
- Check before driving
- Measures in the event of an accident – incident – emergency
- The use of safety equipment
- Legislation
- YKB – Professional compendium certificate
- BBS – Behaviour Based Safety
- ADR – Permit (*If applicable)*

2. Regulations

2.1 Driver instructions

For each individual transport, Scandi Bulk AB will give each haulage company clear instructions regarding the following informartion:

- Date and time for loading
- Loading address
- Date and time for delivery
- Delivery address
- Product information
- Risk analysis if necessary
- Transport protection plan if necessary
- Any special instructions on specific products

The transport instructions given shall be forwarded to the driver.

When the transport is completed, all documentation must be returned to the transport line no later than the next business day.
In the event of a delay, Scandi Bulk AB shall be immediately informed.

Under no circumstances may a contracted haulage company hire or use another subcontractor to issue a transport ordered by Scandi Bulk AB if it is not communicated and has been approved before. Scandi Bulk AB requires that all information provided to the haulage vehicle at the transport assignment are to be treated confidentially.

A driver always has the right to stop a transport/loading/delivery if he feels that it cannot be carried out safely!

These may be external circumstances, such as slippery road conditions or, for example, a lack of procedures on the part of a receiver that compromises safety. A stopped transport should always be reported immediately to Scandi Bulk AB by telephone contact so that we can take necessary and urgent measures.
For stopped transport in addition to working hours (8-17) our hotline should be used: +46 31-16 47 52.

2.2 Personal protective equipment

The haulier is responsible for ensuring that personal protective equipment is available at each transport, and that this **is checked** annually.

Appropriate protective equipment must be available in order to carry out the transport in a safe way, such as:

- Full-coverage clothing - Notice
- PVC- or rubber gloves
- Safety glasses
- Helmet with hearing protection
- Dust protection – special requirements for certain products
- Respiratory protection
- Reflective vest
- Eyes shower
- Fall protection

Auxiliary equipment – First Aid Kid containing:

- General advice brochure
- Bandage material
- Compresses
- Sorted bandages
- Adhesive patches
- Disposable gloves (thick)
- Scissors

Note! Eye showers and First-Aid-Kit should be checked daily before start up.

2.3 Driving License/Driving and Rest Times and the Road Working Hours Act

Driving License
All drivers must hold a valid driving licence relevant to the class of vehicle being driven. A driving licence must be presented at the request of the police. Each year, the validity of all driving licences must be checked. The information shall be available to Scandi Bulk AB upon request.

Driving and Rest Times
The driving and rest time rules are there to meet traffic safety during transport. No driver shall drive his vehicle tired and thus pose a traffic hazard. It is the employer`s obligation to plan the transport in such a way that laws and regulations are complied with. The employer must also check that the regulations are complied with and work to ensure that the rules are complied with.

Road Working Hours Act
The Road Working Hours Act applies to mobile workers and drivers who are self-employed and who perform road transport covered by the EC´s driving and rest time rules. The Road Working Hours Act regulates, among other things, working hours and breaks. Through collective agreements, exceptions can be made from certain provisions in the law. Responsible for supervision is Transportstyrelsen. www.transportstyrelsen.se

To be able to carry out the planned transport requires your own good knowledge of the Driving and Rest Time Act and the Road Working Hours Act.

For current legislation, see:

SFS2004:865
”Regulation on driving and rest times, as well as tachographs etc.”
EG 561/2006
”Regulation on the harmonization of certain social legislation relating to road transport”

2.4 Operation Clean Sweep

Operation Clean Sweep is a global initiative with the goal of keeping the emissions of plastic particles in nature in check and preventing spills from entering watercourses that eventually lead to the sea. Although consumers are responsible for the proper disposal of the products they use, the plastics industry must focus on the proper containment of its products. Scandi Bulk AB supports this initiative and requires that contracted subcontractors handle waste correctly in each delivery. For proper handling, the following is required:

- Raise awareness within the hauler and with each driver
- Clean and clean after spills with each delivery
- Make sure that the roof of the container is free of granules after loading
- Make sure that no plastic granules leak after removing the innerliners
- Always leave the loading area clean and free from spills

Please find more information on: www.opcleansweep.org

3. BBS/YKB

3.1 BBS/YKB

Alla chaufförer som utför transporter på uppdrag av Scandi Bulk AB ska vara utbildade i BBS (Behaviour Based Safety) eller motsvarande YKB (Yrkesförarkompetens).

Det är arbetsgivarens skyldighet att tillse att samtliga chaufförer som är anställda och beordrade att utföra transporter för Scandi Bulk AB uppfyller dessa krav.

4. Loading – Unloading

4.1 General procedures for loading and unloading units

To ensure the handling of the company's equipment so that no incidents or accidents occur, the following procedures must be reviewed:

- The driver must be a good representative of Scandi Bulk AB and always behave correctly.
- The driver must be properly dressed with covering, clothing and safety shoes.
- The necessary protective equipment must be used.
- Container locks shall be inspected regularly to ensure operation and safety. The driver should be able to easily control the locking with extended “flags” with strong colors or similar.
- When collecting at the terminal, the transport documents must always be checked to ensure that they are in line with the transport mission.
- Upon collection of the unit, the unit number must be checked by the driver to ensure it matches the provided transport documents.
- Before lifting the unit, a visual inspection must be carried out of the condition of the unit. Any damage to the unit that may affect unloading or loading shall be reported to the traffic management. The vehicle shall remain in place until notification of how the mission is to be carried out.
- If the damage is of a minor nature, the container can be lifted on, but the car must not leave the terminal without the driver receiving a stamped and signed damage report. You will find copies of the damage report in your vehicle and the last page of this manual. ***Scandi Bulk AB is liable to bear any damage that has not been properly documented.***
- The unit should be checked on the front, rear, right, left, above and bottom. Most common are damage screeches and dents alone the sides of the container as well as punched holes from crackles in the container frame.
- When retrieving a washed drive, the disk certificate must be in the document holder.
- All transport documents shall be placed in the document holder of the unit when unloading at the terminal. During transport, they must be stored in the vehicle in the event of an accident.
- Make sure that overhead lines, gaskets, taps and lids looks ok before loading or unloading.
- The unit must be cargo-secured by container locks before transport can begin.
- In the event of lift-off, the air shall be released from bellows of the car and trailer. This is so that the suspension will not quickly go up to the top.
- Check the height after loading the unit, so the permissible maximum height is not exceeded.
- The air suspension shall be in the driving position during transport.
- Stop blocks shall be used for unloading/loading.

- Always connect ground cables with flammable products, static products such as starch.
- Instructions given by the customer`s staff shall be followed.
- The driver shall use the designated sanitary facilities of the customer
- Work at height must be done with a safety harness or that the safety railing is raised when you go up the container.
- Clean the vehicle if necessary from any spillage at the designated location before departure.
- All information in the consignment note must match the booking information received from the traffic management.
- Check loaded weight based on the transport assignment (overweight). The driver shall not leave the area if the loaded product differs +/- 200 kg. Then contact Scandi Bulk and wait for instruction.
- Note the arrival and departure time at the appropriate location in the consignment note.
- Make any reservations directly on the consignment note or CMR, e,g damage to equipment or similar.
- The consignment note must always be signed by the shipper and the consignee with loading and unloading times noted on it. In the case of long unloading/loading times, the reason for the time taken shall be recorded on the consignment note including any customs documents.
- In case of dangerous goods, that the procedures are followed according to 4.10.

4.2 Procedures for unloading devices

In addition to 4.1. In order to ensure that the product is properly filled and to avoid incidents and accidents, the following procedures shall be reviewed:

- Make sure that the unit, valves and hoses are cleaned according to the customer`s requirements before loading the product.
- The driver must arrive at the loading point on time.
- Make sure that the correct product is loaded according to the load order. If the customer wants to load another product, Scandi Bulk should be contacted immediately before loading.
- The evacuation tap must be open and the tank depressurized while driving.
- The manholes must be properly closed before departure

4.3 Procedures for unloading devices

In addition to 4.1. In order to ensure that the product is delivered properly and to avoid incidents and accidents, the following procedures shall be reviewed:

- The driver must report his arrival to the customer, inform the customer of hos case, what product and who he is.
- The bill of lading must be presented to the resonsible at the customer who must write the specified silo/tank number on the consignment note **before** unloading begins.
- The arrival and completion times shall be recorded at the appropriate location on the shipping document.
- Seal numbers shall always be checked and match the CMR's seal numbers.
- Seals must not be broken without the customer`s go ahead.
- If you request from the receiver for work at high height, please contact the transport management. This also applies to sampling of the product in a tank via manholes that are not acceptable.
- After unloading, a unloading report with location, date, time-of departure time, container number and weight shall be sent. In case of extra time (more than 2 hours), the cause must be stated.
- After unloading, take a picture of the consignment note and MMS to traffic control.
- On delivery, the consignee must always receive his or hers hare of the freight document. (Bill of lading, CMR, weight bill, analysis certificate). Unless the copies are sufficient to ask for a copy if possible.
- If a recipient wishes to be delivered to IBSs or barrels, please contact the transport pipeline.

Note! Any invoice should never be submitted to the consignee if it is attached to the shipment.

4.4 Loading of tank containers

In addition to 4.1 and 4.2, the following procedures shall be reviewd to avoid incidents and accidents when loading tank containers:

- Make sure that all manholes, bottom valves and outlet valves and their gaskets are in good condition and closed.
- With loading staff make sure that no overfilling occurs.
- The filling rate must never be between 20-80% both when loading dangerous goods and unclassified products. This does not apply if the tank container is equipped with bulkheads.
- The driver shall not leave the area if the loaded product does not meet the filling rate or if the order weight differs +/- 200 kg. Then contact Scandi Bulk and wait for instruction
- When loading is complete, the arrival and departure time must be registered on the customer`s transport document. Loaded weight should be reported to Scandi Bulk.

4.5 Unloading of tank containers

In addition to 4.1 and 4.3, the following procedures shall be reviewed to avoid incidents and accidents during the unloading of tank containers:

- The emptying of the tank container shall be immediately interrupted if a fire occurs nearby or if thunderstorms pass overhead.
- After emptying, the driver shall check that the entire contents have been emptied and that the quantity is correct.
- If residue remains in the tank container, the driver should remain in the area and contact Scandi Bulk and await instructions.
- When pressurised, the pressure must not exceed the working pressure of the tank container, MAWP.
- When pumping or self-draining, air must be released into the tank container pressure equalization.

4.6 Sampling, tank

Upon arrival at the place of delivery, the customer may require a sample for analysis before emptying begins. The samples are often taken by the customer`s own staff.

If the driver is asked to carry out the sampling, he must before taking the sample follow the following instructions:

- Get acceptance from traffic management.
- Exercise extreme caution. Sampling shall NOT be carried out via manholes.
- Wear the necessary protective equipment.
- Ensure that the equipment to be used for the work is correct, clean and safe.
- If the sample has been taken through the lower outlet valve, extreme care must be taken to prevent spillage when opening the bottom valve.
- If safety rails are on the tank, they must be in an upright position when a sample is to be taken otherwise the fall arrest harness must be used.
- When the customer`s staff is asked to take the test and it is necessary to climb up to the tank, the person in question must be clear that it is done on own responsible for any damage.
- When samples are to be taken on flammable products, the vehicle must be grounded before the sample is taken.

4.7 Preventive procedures – Pressure tanks

In order to ensure the handling of the company`s equipment so that no incidents or accidents occur, the following procedures must be followed:

- Safety valves must not be blocked or disabled.
- Gauges that are not working or faulty should be replaced immediately.
- The tank must be without pressure before opening or screwing the manholes on top of the tank. Check with the vent valve.
- If the tank is under pressure, it is forbidden to tighten the screws of the loading hatches in the tank.
- The lids should be tightened by hand. Hammers or extenders must not be used.
- Maintenance must be in perfect condition. Lubricated bolts and nuts on all manholes.
- Always let the safety valve work every time you loosen, by screwing on top. Lubricate the safety valve regularly.
- The car must be locked and the key to the ignition must be socketed before work in the tank can begin.
- The tank must not be unattended during unloading. The driver must be present.
- Never exceed the pressure the tank is approved for.
- The outriggers of a tank tipped up shall not be altered.
- A vehicle must never be moved if the tip is up.
- Work at height must be done with a safety harness or that the safety railing is raised when you go up on the tank.
- Regularly carry out checks on tanks, hoses, couplings, valves, etc. m and report deviation as soon as possible.

4.8 Tipping bulk unloading

In order to ensure that the unloading of the product supplied with tipper bulk is carried out with the utmost security for the staff involved, and to minimise the risk of contamination of the product, the following procedures shall be reviewed:

- Park the vehicle on lever ground with the car and trailer in a straight line.
- Make sure that all the doors, couplings and hoses are connected correctly and to the correct silo and that these are tightened (these may change during transport
- Connect ground cable when unloading starch other static materials.
- Close the evacuation tap.
- Make sure that all 4 container locks are locked during container release.
- Use the air suspension valve to raise the trailer.
- Use the rear outtriggers to get the trailer in a horizontal position. Use the spirit level on the trailer.
- Release the pressure from the air bellows. Let out a little at a time as the product goes out of the tank, so will not be the entire load on the outriggers. It is important to release all the pressure when there is only a few tonnes left in the tank, as the bellows can lift the outriggers off the ground.
- Adjust the pressure in the tank through the top air to a maximum of 2 bar.
- If the release takes place through the rear manhole when tipping, the front-loading door at the top must be opened to avoid vacuum damage.
- The tank should be tipped three (3) pistons into emptying.
- It is forbidden to be under the container when it is tipped.
- Start emptying the tank by using a mix of auxiliary air, bottom air and top air while opening the product tap (how the mix should look depends on unloading conditions such as stroke, pipe dimension, silo placement and which product to loosen).
- Monitor the unloading. The driver must always be in the vicinity of the cranes in order to be able to stop unloading of something occurs.
- Use a hose wrench to secure the coupling
- Regulate pressure and product flow by using the taps.
- Gradually increase the tip angle as the product is released from the tank.
- Make sure that hose couplings do not want to twist during unloading.
- Release the bellows when the tank starts to empty.

- Avoid tipping the plunger to the end position, If this happens accidentally, lower the tip immediately any degree (avoid constant maximum pressure for the tip). Allow the safety valve/valves to trigger at times during unloading by screwing on top. The valves should be lubricated at regular intervals.
- When the tank is empty, the hose should be blown clean before turning off the compressor. Use rubber mallet. Tap the tank to make sure it`s gone empty. After-hours blowby opening and closing the product tap a few times, while blowing in top, under and auxiliary air.
- Close all taps except the auxiliary air.
- Turn off the compressor.
- Lower the tank with the tipping lever (the tank must not be dropped with evacaution tap,as there may be a risk of crushing injuries).
- Raise the air bellows with raises and the safety valve to the outriggers are free.
- Raise up the outriggers.
- Set the raise and lowering valve in running position.
- Open the evacuation tap on the bank (always must be open, except when unloading).
- Visually make sure the tank is empty after it has become depressurised.
- Clean after any spillage at the unloading point before leaving the area.
- Document (deviation reports, and tag briefly) and report any spillage to the transport line.
- If you request from the receiver for work at high altitude, please contact the transport management.

4.9 Unloading of tipping bulk with cell feeder

In order to ensure that the loading of the product supplied with tipping bulk with cell feeders is carried out with the utmost security for the staff involved, and to minimise the risk of contamination of the product, the following procedures shall be reviewed:

- Park the vehicle on level ground with the car and trailer straight line.
- Make sure that all the doors, couplings and hoses are connected correctly and to the correct silo and that these are tightened (these may change during transport).
- Connect ground cable when unloading starch or other static materials.
- Make sure that all 4 container locks are locked during container release.
- Use the air suspension valve to raise the trailer.
- Use the rear outriggers to get the trailer in a horizontal position. Use the spirit level on the trailer.
- Release the pressure from the air bellows. Let out a little at a time as the product goes out of the tank, so will not be the entire load on the outriggers. It is important to release all the pressure when there is only a few tonnes left in the tank, as the bellows can lift the outriggers off the ground.
- Open the door secure it in open position against the container.
- Lift up the unloading funnel and let it rest against the bottom beam of the container. Press it against the inner liner and secure it with the help of couplings and if necessary adapters against the container.
- Cut off the vertical straps that hold the inner liner in a "safety cutter" not a regular knife so as not to damage the inner liner from left to right. At each cut, pull the inner liner upwards to avoid pressing it outwards.
- Unfold the detachment on the innder liner and thread it through the round hole on the unloading adapter. Cut off the closed end of the unloading cone.
- Mount the valve on the end of the release funnel, the valve should be in the closed position.
- Open the cell feeder and make sure it is 100% clean.

  Note! When working in the cell feeder, its blades must always be blocked so that they do not move spontaneously and injure staff.

- Fit and check that the safety grille is correctly inserted into the cell feeder.
- Mount the flexible release hose against the valve and against the cell feeder, mount the return filter on the cell feeder.
- Connect the hose from the compressor to the inlet to the cell feeder.
- Connect the release hose to the outlet of the cell feeder.

- Blow through for a new minutes to ensure that no foreign product residues remain in the cell feeder.
- Connect the unloading hose to the receiver`s silo, open the valve on the receiver`s silo.
- The tank should be tipped two (2) pistons into emptying.
- After the material in the container begins to flow out, open the valve slowly and start unloading.
- It is forbidden to be under the container when it is tipped.
- Monitor the unloading. The driver must always be in the vicinity of the cranes in oder to be able to stop unloading if something occurs.
- Use a hose wrench to secure the coupling.
- Regulate pressure and product flow using the taps max pressure about 0.8 BAR.
- Gradually increase the tip angle as the product is released from the tank.
- Make sure that hose couplings do not want to twist during unloading.
- Release the bellows when the tank starts to empty.
- Avoid tipping the plunger to the end position. If this happens accidentally, lower the tip immediately any degree (avoid constant maximum pressure for the tip).
- When the material stops flowing out tip down again if the inner liner has inflatable pads use them now otherwise gently shake the material down the corners of the container against the unloading funnel. Tip up again and loosen the last one.
- When the tank is empty, the hose should be blown clean before turning off the compressor. Use a rubber club.
- Turn off the compressor, tip down the container with the tipping lever (the tank must not be dropped with the evacuation tap, as there may be a risk of crushing injuries).
- Close all valves, disconnect hoses.
- Reassemble the equipment close the cover of the container.
- Raise the air bellows with raises and the safety valve to the outriggers are free.
- Raise up the outriggers.
- Set the raise and lowering valve in running position.
- Clean after any spillage at the unloading point before leaving the area.
- Document (deviation reports, and tag briefly) and report any spillage to the transport line.
- If you request from the receiver for work at hights, please contact the transport management.

4.10 Transport of dangerous goods

Documents

Following documents shall be carried on the transport unit:

- ADR certificate with tank rating
- Identity card with photograph
- Instructions in writing
- Dangerous Goods Declaration
- Vehicle certificate
- Other documents such as permits, contracts, dispensations, etc.

Placarding and marking

Vehicles and containers shall be marked before transport as shown below. It is the responsibility of the carrier that the transport unit has dangerous goods marking. The carrier shall ensure that placards, orange-coloured plates, and markings are affixed to the carrier. Or equivalent approved IMDG marking if the transport chain includes maritime transport. If there is no correct marking of vehicles and load carriers, the transport must not begin.

- Transport units shall display orange-coloured plates.
- Container shall be marked with placards, orange-coloured plates with UN number and hazard identification number according to ADR and loaded cargo.
- Environmentally hazardous mark, elevated temperature mark if required by product.

Training

The driver must have approved driver training and hold a valid ADR certificate and licence.

Approved vehicle

Vehicles shall comply with the ADR regulations for the substance in question being transported.

Equipment vehicles and crew

Each transport unit must be equipped with:

- Two easily accessible fire extinguishers each 6 kg marked with valid test date
- At least one wheel chock per vehicle, of size suited to the maximum of the vehicle and to the diameter of the wheel
- Two self-standing warning signs
- Eye rinsing liquid

For each member of the vehicle crew:

- Warning vest according to EN 471:2003 + A1:2007
- Portable lighting, without metal surface liable to produce sparks
- A pair of protective gloves
- Protective goggles

Additional equipment required for certain classes, see also instructions in writing.

- An emergency escape mask with a combined gas/dust filter according to EN 14387:2004 + A1:2008
- A Shovel
- A drain seal
- A collecting container

Passengers

In addition to member of the vehicle crew, no passengers are allowed.

Smoking

Smoking is prohibited nearby or inside vehicles. The smoking ban also applies to electronic cigarettes and similar products.

Supervision and parking

Parking of vehicles containing certain types of dangerous goods shall be supervised. Supervision is not required if vehicles are parked in a secure depot or secure factory premises.

If such facilities are not available, the vehicle, after having been properly secured, may be parked in an isolated position meet the requirements in order of:

1. A vehicle park supervised by an attendant who has been notified of the nature of the load and the whereabouts of the driver.
2. A public or private vehicle park where the vehicle is not likely to suffer damage from other vehicles.
3. A suitable open space separated from the public highway and from dwellings, where the public does not normally pass or assemble.

Security provisions and high consequence dangerous goods

Security means measures or precautions to be taken to minimise theft, or misuse of dangerous goods that may endanger persons, property or the environment. All those involved in the transport of dangerous goods shall be trained in security of dangerous goods.

In transports of high consequence dangerous goods, shall the established security plan according to ADR 1.10.3.2 be followed. It is the properties and quantity of the goods that determine whether it is considered to have high consequence dangerous goods and which can be abused through terrorist offences that lead to major consequences.

Information about the load

The driver must ensure that instructions in writing of the dangerous goods is carried before transport begins and that they are visible in the event of an emergency. Only instructions in writing for dangerous goods on board the vehicle shall be visible. Other written information shall be placed in the closed storage area.

In the event of a situation that may endanger the safety of the transport and the surroundings, the driver shall immediately interrupt the transport and contact the transport command for further information. It is the responsibility of the driver not to risk information about the transit of the goods and services to unauthorised persons. This is to prevent crime and terrorism. The driver should be vigilant about what is being discussed, for example, at lunch places.

4.11 Information about products

Information about the products to be loaded is given by Scandi Bulk via the transport instruction.

The driver shall not commence transport until he has received the CMR or the bill of lading for the product from loader.

This information helps emergency personnel identify the products in the event of an accident or leakage. They are also informed of the hazards that the product may entail, the type of clothing or protective equipment required and the emergency measures to be taken.

The written information must be stored in the driver`s cab and be visible at all times the product is loaded or until the tank is emptied, cleaned and deemed safe.

The written information shall be kept in the driver`s cab until the container is lifted off in port. The documents shall then be stored in container`s document tubes. In the absence of a document tube, the transport line shall be informed immediately.

Weather

It is the responbility of the driver to plan the transport with the prevailing weather conditions.

Parking

Check the following:

- Possible spillage of diesel or chemical product. Use absorbents in the first place and contact the transport line to find out where to do with the waste.
- Use tiles to avoid damage to the asphalt from support legs.

4.12 Control – Inspection, carrier

Vehicles

Vehicle inspection must be carried out in accordance with the legislation in force.

It is the duty of the employer to ensure that the legal requirements relating to the maintenance of their own vehicles are complied with. It is of the utmost importance that the driver himself has knowledge of how the procedures are carried out in order to determine for himself whether the vehicle can be driven in an approved and safe manner.
Container locks shall be inspected regularly to ensure operation and safety. The driver should be able to easily control the locking with extended "flags" with strong colors or similar.

Cargo carrier

The collection of carriers from or storage area shall be carried out by the driver, the driver shall carry out a complete check with particular attention to critical points of valves, connections and construction. If an injury is obvious, or the driver is unsure, he should immediately contact Scandi Bulk AB before moving. In the event of damage, a damage report must be prepared which is countersigned by staff from the pits, port or factory. This report is submitted to the haulage company upon completion of transport, which then ensures that the report will be received by Scandi Bulk AB, for example by email to claims@scandibulk.se

Each vehicle must be equipped with a number of inspection/damage reports, but they can also be downloaded from our website, *www.scandibulk.com/rapport*

Make sure that any warning signs are correct and exposed. Make sure the tank is properly secured.

Make sure that:

- Seal numbers match the CMR.
- Bottom valves and outlet valves are closed and there is no leakage.
- The manhole door is closed and dense, sealed if necessary.
- The hoses are safe and covered with lids.
- Correct warning signs for the product loaded are in place.
- The load has been weighted, read or measured and that it has been properly documented.

It is the responsibility of the driver to ensure that the correct signs for hazardous chemicals are in place and that the correct written instructions, and only this, are displayed in the cab of the driver.

The driver must also ensure that the maximum total weight and individual axle pressures of the vehicle are not exceeded. If the driver has doubts as to the legality of his vehicle or his load, he shall contact the traffic management for instructions.

Hoses
Unloading hoses must be test-printed once a year and marked with a test-printing date.

5. Measures in the event of an accident

In the event of a major accident or traffic accident:

1. Warn the immediate surroundings
2. Help the injured if this can be done without risk to their own life
3. Call 112

5.1 Driver´s responsibility and actions in the event of an accident

The driver´s actions

Driver report

In the event of an accident or incident, the driver shall immediately, by telephone, report all details of the event to his haulage operator, which in turn shall inform Scandi Bulk AB immediately. Written statements must be submitted to Scandi Bulk AB within 24 hours at the latest.

In the event of accident or incident involving personal injury, death or loss of product, the driver shall immediately call the rescue service. The driver shall remain at the scene of the accident until the rescue service has taken over responsibility for the situation. The driver may leave the scene of the accident only if the rescue service have given permission.

The driver´s action in the event of an incident or accident

In any incident or accident, the driver must provide all possible assistance, especially in the case of personal injury.
All measures must be taken with the utmost care so that the driver does not risk his or her own life or the life of others and does not otherwise cause the company liability for costs or assume that the company takes responsibility for the consequences arising from the incident or accident.

The driver shall take name and address of witnesses and of third parties. If names and addresses are not disclosed, the accident must be reported to the police within 24 hours.

In case of personal injury, the accident must be reported to the police as soon as possible and in any case within 24 hours if the police are not already on the scene.

The driver may not express any personal opinion to third parties on the responsibility for the incident or accident. It is enough for the driver to mention that all the details of the incident or accident will be reported to the haulier.

The haulier shall evaluate the incident or accident and, if necessary, make a visit to the accident site. All investigation shall be carried out by management where necessary.

Parking and cargo separation of vehicles with dangerous goods

The vehicle should be parked properly and safe so that it does not cause any trouble or stand in the way. For stops exceeding 1 hour, including overnight parking, it has been recommended that safe truck parking should be chosen as the first parking option. The driver shall also ensure that he is not parked next to or in the immediate vicinity of other vehicles laden with NON-COMPATIBLE products.

The next option should be a factory or a store where with a large open space and which is closed to the public. The very best thing is to arrange this type of parking in advance and the driver should inform himself about where he can park his vehicle. If none of these options are possible, the following options are recommended instead:

- A truck parking
- A private accommodation with parking
- A piece of road used as a parking site, closed at one end closed to all transit traffic

These rules apply when the vehicle is loaded. However, *when the tank is virtually empy-e.g. as much product as is practicable has been removed from it*, these special parking rules do not need to be applied.

When parking for less than 1 hour, the driver should remain close to vehicle and, if possible, keep it under surveillance and be close enough to intervene quickly in the event of an emergency.

Always make sure that the towing vehicle and trailer are connected, again in the event of an emergency. If the driver has trouble finding a suitable parking space, he should contact the local police for advice.

Should it be necessary to stay overnight elsewhere, the home custody should be contacted and informed of the location of the vehicle as quickly as possible after completion of transport.

5.2 Contact persons in the event of an Accident – Incident - Emergency

In the event of an accident, incident or emergency, Scandi Bulk AB must always be contacted immediately. If necessary, the customer/recipient shall also be informed by the emergency number provided in the transport document.

Emergency preparedness

The emergency number of Scandi Bulk AB is switched on 24 hours a day.

EMERGENCY NUMBER:
+46 31 16 47 52

SCANDI BULK
Intermodal Bulk Liquids & Solids
Scandi Bulk AB, Viktoriagatan 3, SE-41125 Gothenburg
claims@scandibulk.se +46 31 7086630

BESIKTNINGSRAPPORT
EQUIPMENT CONDITION REPORT

Datum:
Date:

Åkeri:
Haulier:

Container:

Hämtad från:
Received from:

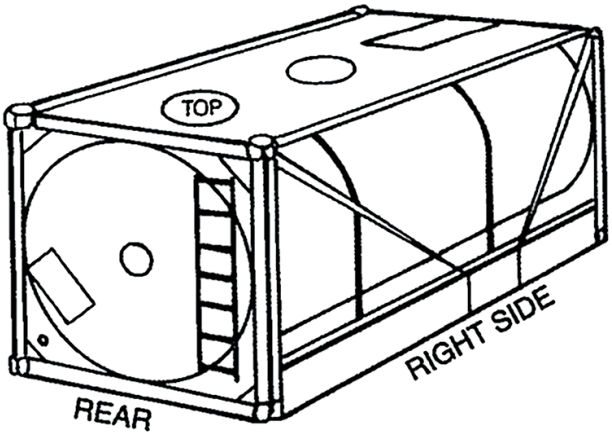

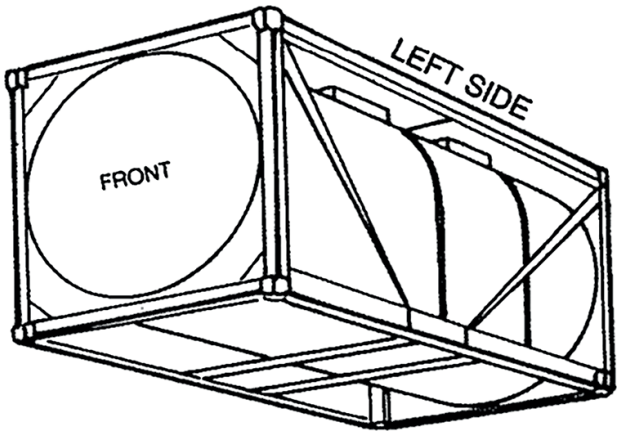

Ange skador med X / *Indicate damages with X*

	Buckla: *Dent:*	**Skrapad:** *Scratched:*	**Lös:** *Loose:*	**Saknas:** *Missing:*	**Beskrivning:** *Description:*
Hörnlåda: *Corner post:*					
Balk: *Beam:*					
Panel: *Cladding:*					
Stege: *Ladder:*					
Gångbord: *Walkway:*					
Elskåp/kabel: *Elec.cab./cord:*					
Dok.hållare: *Doc.folder:*					
Märkningar: *Markings:*					
Bottenventil & blindlock: *Bottom valve & dust cap:*					
Manlucka & packning: *Manlid & gasket:*					
Termometer/tryckmätare: *Thermometer/pressure gauge:*					
Övertrycksventil: *Pressure relief valve:*					
Vakuumventil: *Vacuum valve:*					
Ångrör/koppling: *Heating/connection:*					

Övrigt: *Other:*	TERMINAL Name, signature, stamp

Vit/white: Scandi Bulk Gul/yellow: Terminal Rosa/pink: Åkeri/haulier